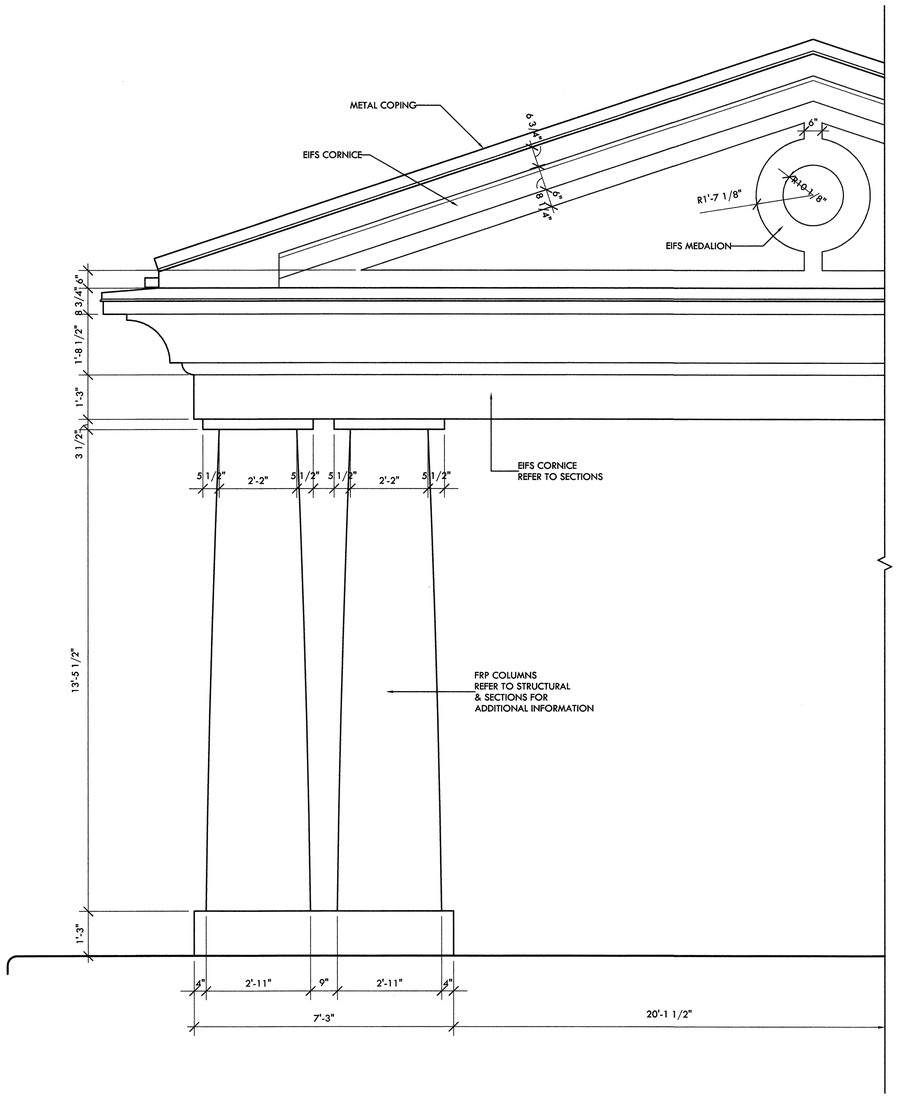

1 CANOPY DIMENSIONS

SCALE: 1/2" = 1'-0"

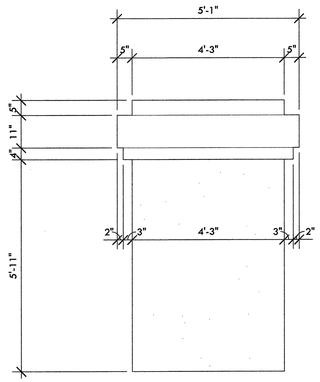

2 CHIMNEY DIMENSIONS

SCALE: 1/2" = 1'-0"

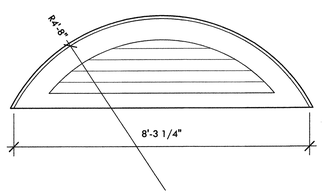

3 DORMER DIMENSIONS

SCALE: 1/2" = 1'-0"

MARK	REVISION DATE	DESCRIPTION

ARCHITECT SEAL

STATE OF MISSOURI
RONALD JACK SLONE
NUMBER A-3308
REGISTERED ARCHITECT

SLONE ARCHITECTS
PLANNERS, AIA
BUILDING "J", SUITE 100
1200 EAST WOODHURST DRIVE
SPRINGFIELD, MISSOURI 65804
PH. (417) 887-4575 FAX (417) 887-5060
www.slonearchitects.com

ENGINEER SEAL

JBB HOSPITALITY, INC.: HOLIDAY INN EXPRESS HOTEL & SUITES ST. ROBERT · MISSOURI

The Drawings, Specifications and other documents prepared by the Architect for the Project are instruments of the Architect's service for use solely with respect to this Project and, unless otherwise provided, the Architect shall be deemed the author of these documents and shall retain all common law, statutory & other reserved rights, including the copyright. The Architect's Drawings, Specifications or other documents shall not be used by the Owner or others on other projects, for additions to this Project or for completion of this Project by others, except by agreement in writing and with appropriate compensation to the Architect.

JOB NO. 07-153

DATE 07-14-08

SHEET A4.2

OF 3 SHEETS